TECHNICAL SCHEDULE

Duravit Starck 3 Concealed Urinal

Code: 821.35

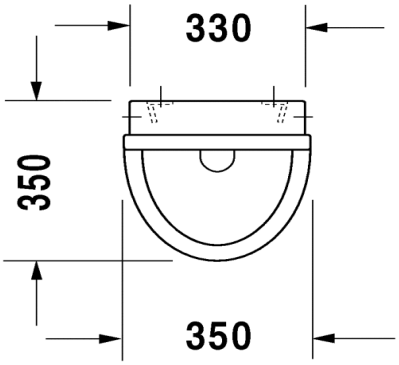

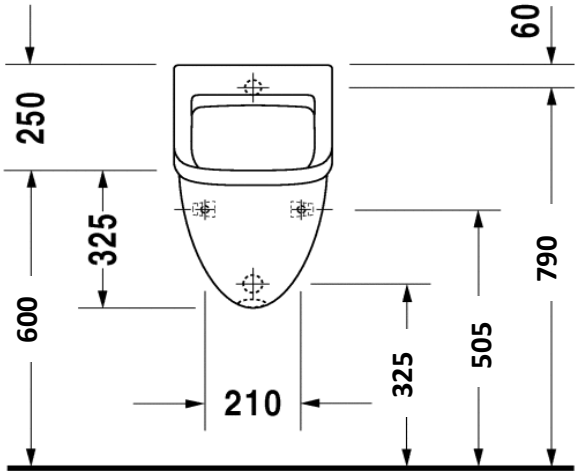

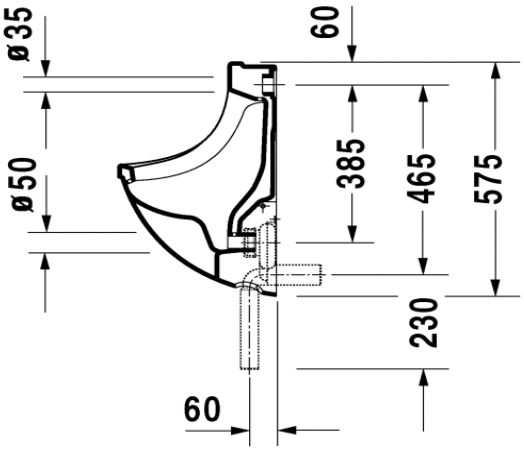

Inspirational + European + Bathroomware

t 09 444 5656 **e** info@metrix.co.nz www.metrix.co.nz