Paini COX

Paini Cox floor mounted spout with handshower & mixer

Finish: Chrome

78CR136

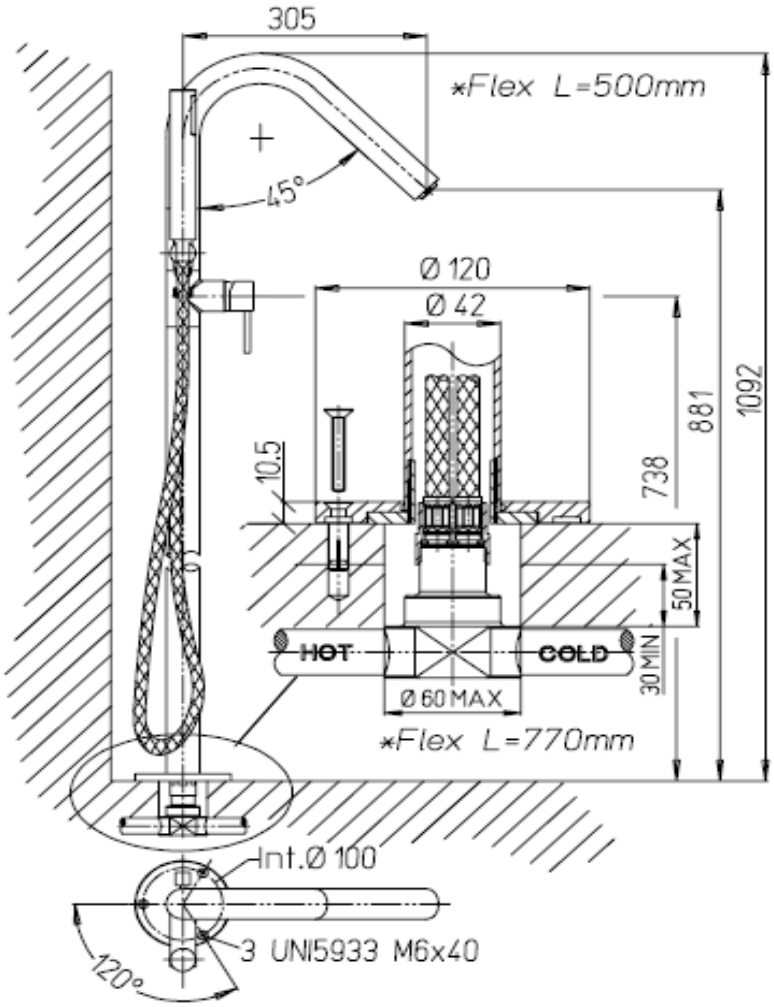

Made in Italy

5 Year Warranty

For Equal Pressure only

Max. Operating Pressure: 500Kpa.

Min. Operating Pressure: 50Kpa.

Pipework must be flushed before installation

Please install as per manufacturers instructions in the box

Due to our policy of continuous product development, the design and specification shown are subject to change without notice.

Please confirm all particulars with your sales consultant prior to purchase.